QFN64 9x9, 0.5P (PUNCH & SAWN)
CASE 485DH
ISSUE O

DATE 27 AUG 2013

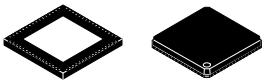

SCALE 1:1 SCALE 1:1

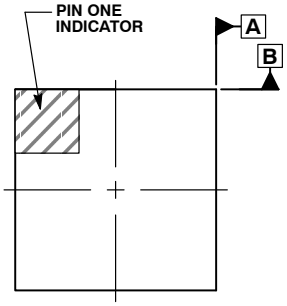

TOP VIEW
ALTERNATE CONSTRUCTION

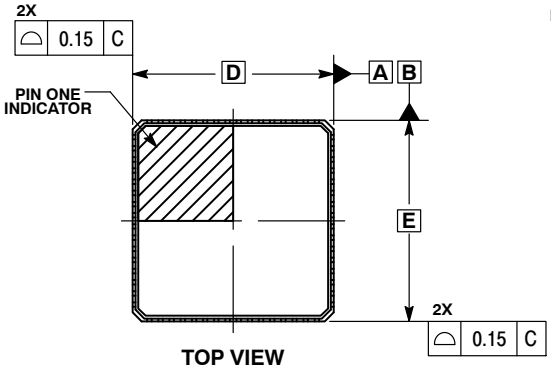

TOP VIEW

NOTES:
1. DIMENSIONING AND TOLERANCING PER ASME Y14.5M, 1994.
2. CONTROLLING DIMENSIONS: MILLIMETERS.
3. DIMENSION b APPLIES TO PLATED TERMINAL AND IS MEASURED BETWEEN 0.15 AND 0.25mm FROM THE TERMINAL TIP
4. COPLANARITY APPLIES TO THE EXPOSED PAD AS WELL AS THE TERMINALS.
5. ALL DIMENSIONS APPLY TO BOTH THE SAWN AND PUNCH PACKAGES.

	MILLIMETERS	
DIM	MIN	MAX
A	0.80	1.00
A1	0.00	0.05
A3	0.20 REF	
b	0.18	0.30
D	9.00 BSC	
D2	5.90	6.25
E	9.00 BSC	
E2	5.90	6.25
e	0.50 BSC	
L	0.30	0.50
L1	0.00	0.15

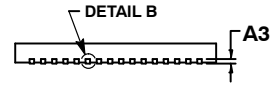

SIDE VIEW
ALTERNATE CONSTRUCTION

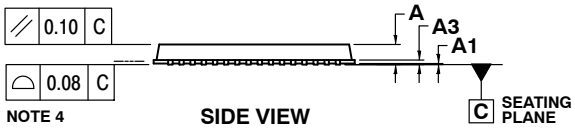

SIDE VIEW

GENERIC MARKING DIAGRAM*

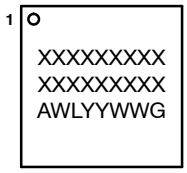

XXXXX = Specific Device Code
A = Assembly Location
WL = Wafer Lot
YY = Year
WW = Work Week
G = Pb−Free Package

*This information is generic. Please refer to device data sheet for actual part marking.
Pb−Free indicator, "G" or microdot "▪", may or may not be present.

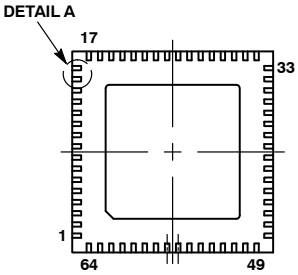

BOTTOM VIEW
ALTERNATE CONSTRUCTION

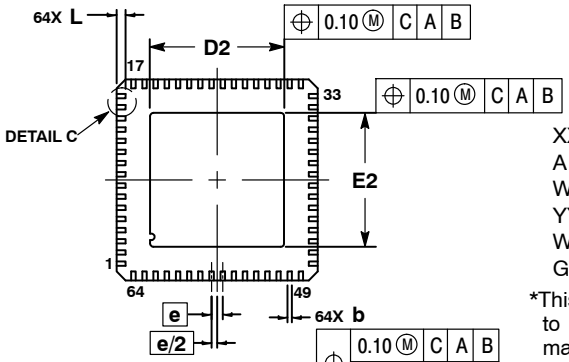

BOTTOM VIEW

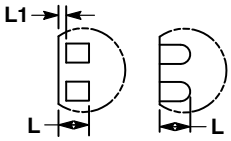

DETAIL A
ALTERNATE CONSTRUCTIONS

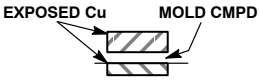

DETAIL B
ALTERNATE CONSTRUCTION

DETAIL C
ALTERNATE CONSTRUCTION

RECOMMENDED SOLDERING FOOTPRINT

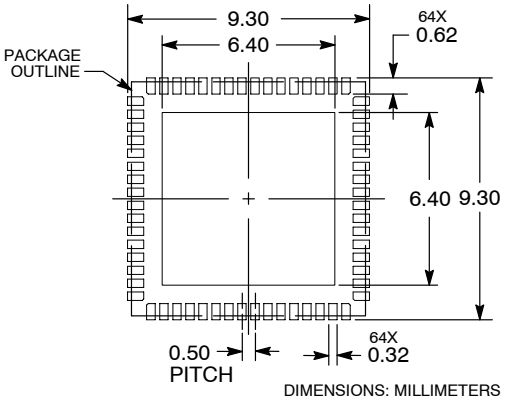

DIMENSIONS: MILLIMETERS

DOCUMENT NUMBER:	98AON77431F	Electronic versions are uncontrolled except when accessed directly from the Document Repository. Printed versions are uncontrolled except when stamped "CONTROLLED COPY" in red.
DESCRIPTION:	QFN64 9x9, 0.5P (PUNCH & SAWN)	PAGE 1 OF 1

ON Semiconductor and ON are trademarks of Semiconductor Components Industries, LLC dba ON Semiconductor or its subsidiaries in the United States and/or other countries. ON Semiconductor reserves the right to make changes without further notice to any products herein. ON Semiconductor makes no warranty, representation or guarantee regarding the suitability of its products for any particular purpose, nor does ON Semiconductor assume any liability arising out of the application or use of any product or circuit, and specifically disclaims any and all liability, including without limitation special, consequential or incidental damages. ON Semiconductor does not convey any license under its patent rights nor the rights of others.

© Semiconductor Components Industries, LLC, 2019